Toyota 4.5 EFI 5VMap Ex-Driver
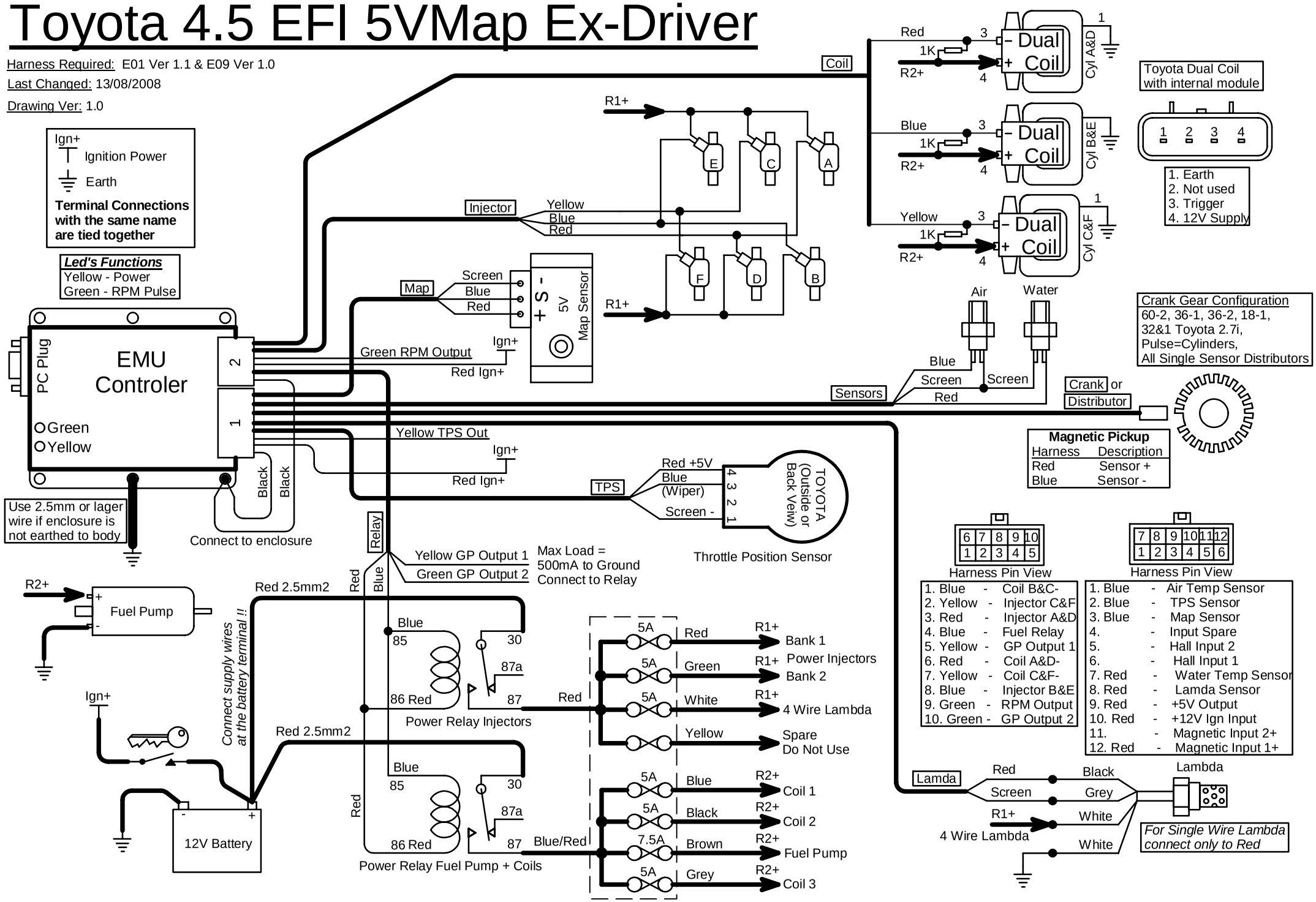
Harness Required: E01 Ver 1.1 & E09 Ver 1.0
Last Changed: 13/08/2008
Drawing Ver: 1.0